REVISION HISTORY			
REV.	DESCRIPTION	DATE	DRAWN BY
1	ORIGINAL PRINT	10/1/2024	P. YEUNG
2	REVISED GLASS FILL PERCENTAGE	2/5/2025	P. YEUNG

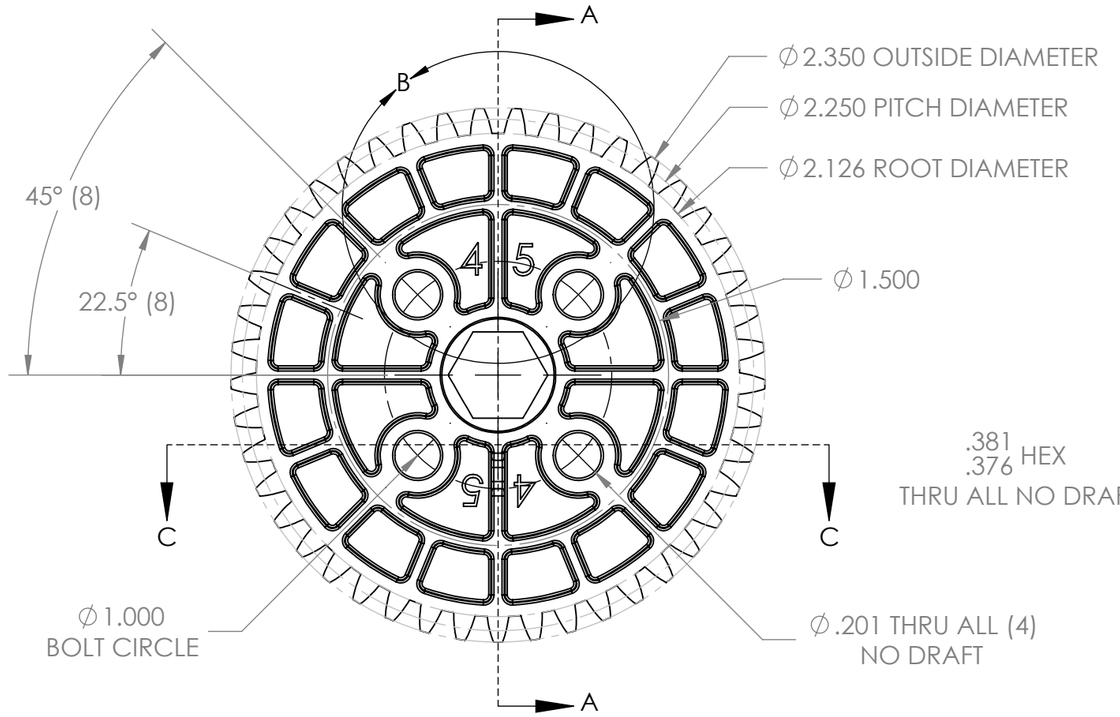

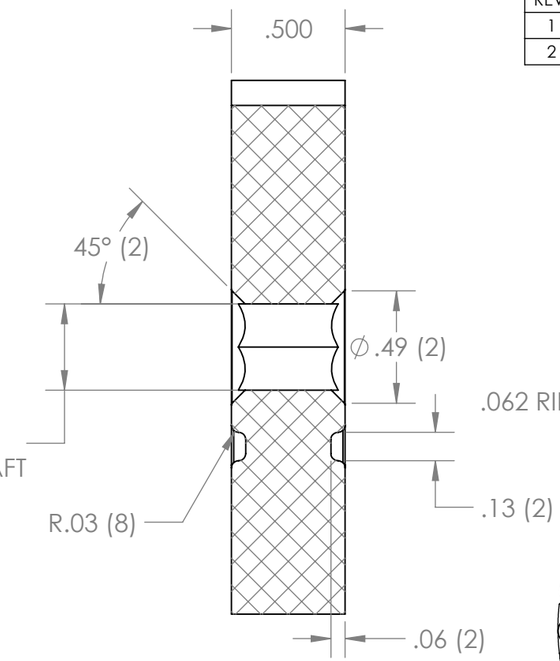

SECTION A-A

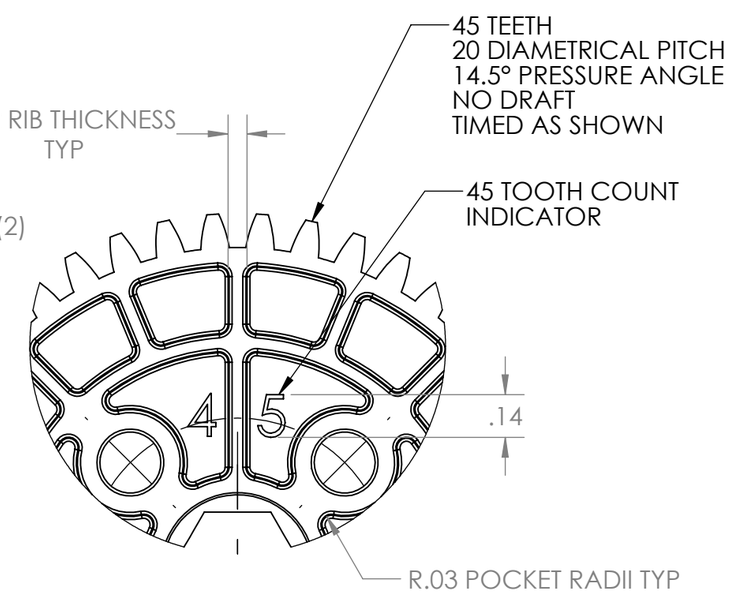

DETAIL B
SCALE 2 : 1

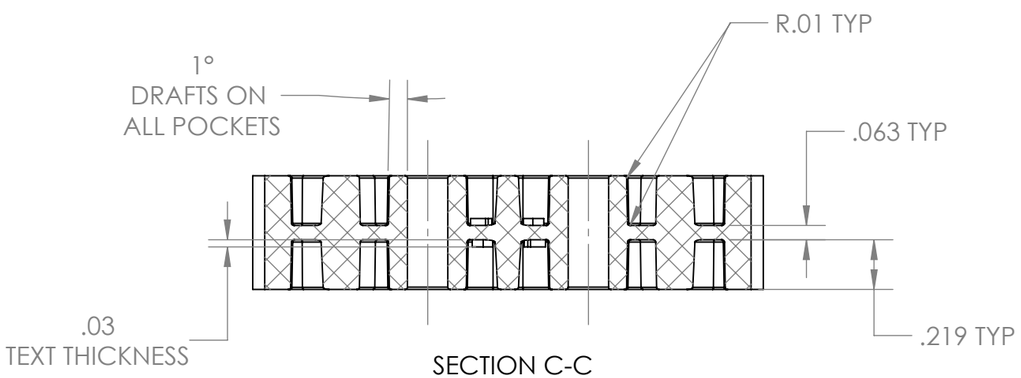

SECTION C-C

*** SEE CAD FOR ADDITIONAL TOOLPATH INFO***

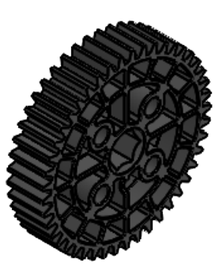

UNLESS OTHERWISE SPECIFIED:	COMMENTS:		
DIMENSIONS ARE IN INCHES	DUAL DIMENSIONS ARE IN MILLIMETERS.		
TOLERANCES:	BREAK ALL SHARP EDGES.		
FRACTIONAL ±1/16			
ANGULAR: MACH ±1°			
ANGULAR: BEND ±5°			
ONE PLACE DECIMAL ±0.1			
TWO PLACE DECIMAL ±0.01			
THREE PLACE DECIMAL ±0.005			
FOUR PLACE DECIMAL ±0.0005			
MATERIAL GRAY NYLON 33% GLASS FIBER		NAME	DATE
	CHECKED	NM	2/5/25
FINISH DEBURRED	ENG APPR.		
	MFG APPR.		
DO NOT SCALE DRAWING	Q.A.		

AndyMark

TITLE:
45T 20DP 14.5PA
0.375IN HEX BORE GEAR

SIZE	DWG. NO.	REV
B	am-5020_45	2

SCALE: 1.5:1 SHEET 1 OF 1